CyberData
The IP Endpoint Company

Installation Quick Reference

Flush Mount Kit, 1X

011443

STEP 1

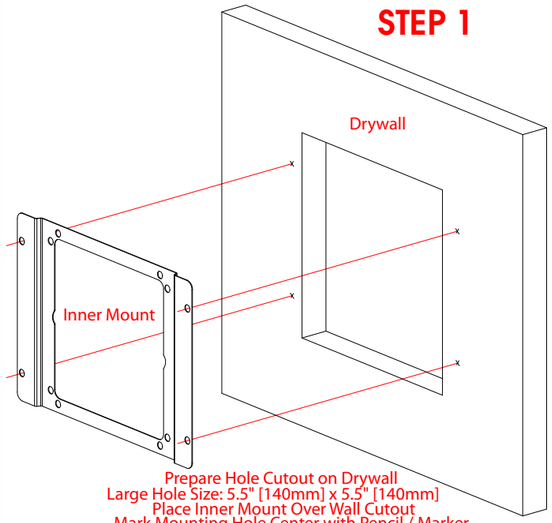

Prepare Hole Cutout on Drywall
Large Hole Size: 5.5" [140mm] x 5.5" [140mm]
Place Inner Mount Over Wall Cutout
Mark Mounting Hole Center with Pencil / Marker
Drill Hole Size to 3/16 Inch/0.1875 Inch or 4.8 Millimeter

STEP 2

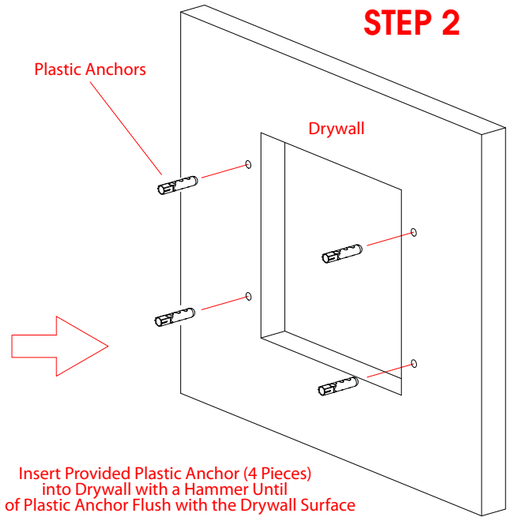

Insert Provided Plastic Anchor (4 Pieces)
into Drywall with a Hammer Until
End of Plastic Anchor Flush with the Drywall Surface

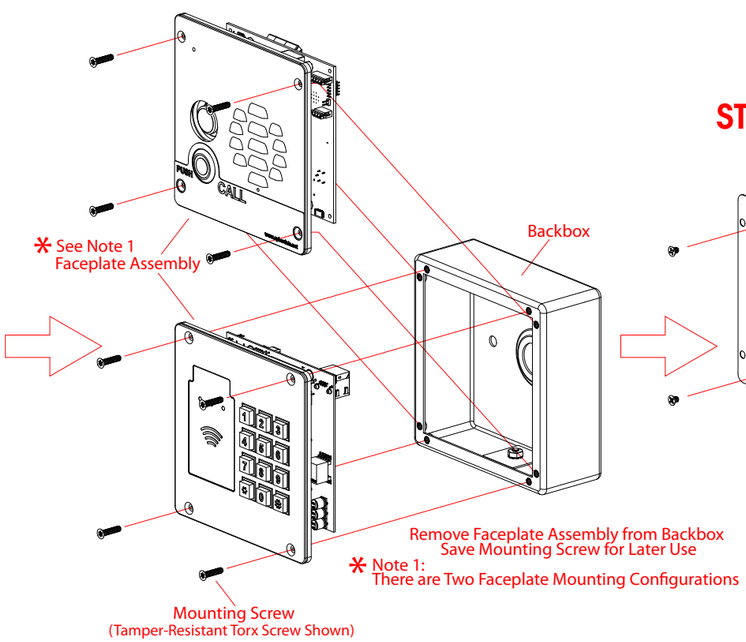

Remove Faceplate Assembly from Backbox
Save Mounting Screw for Later Use

* Note 1:
There are Two Faceplate Mounting Configurations

STEP 3

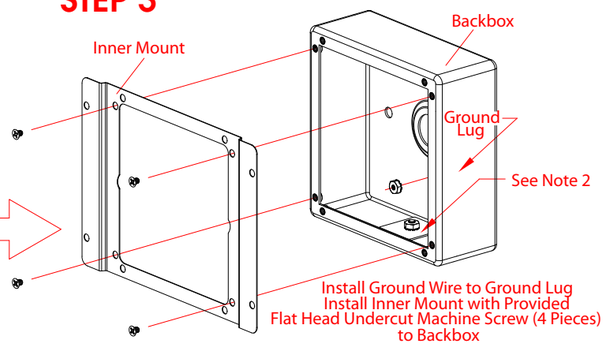

Install Ground Wire to Ground Lug
Install Inner Mount with Provided
Flat Head Undercut Machine Screw (4 Pieces)
to Backbox

Note 2:
Remove Hole Plug Assembly from Backbox
if Wire and Cable are Come in from Side

STEP 4

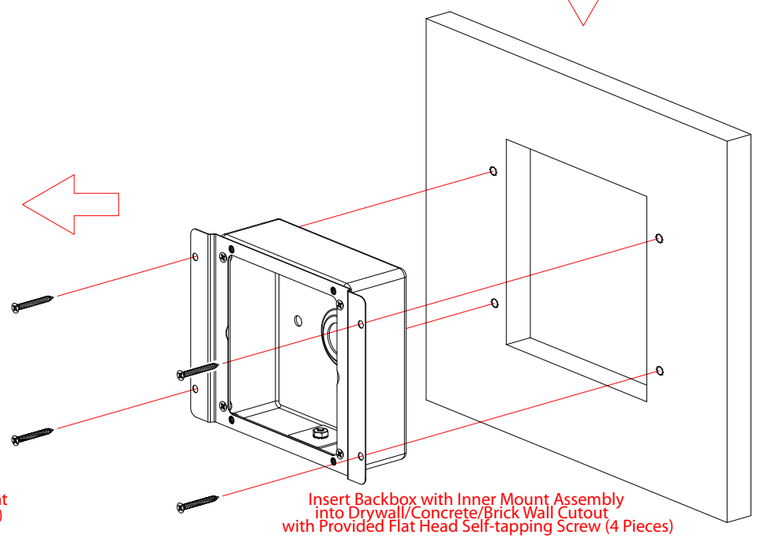

Insert Backbox with Inner Mount Assembly
into Drywall/Concrete/Brick Wall Cutout
with Provided Flat Head Self-tapping Screw (4 Pieces)

STEP 5

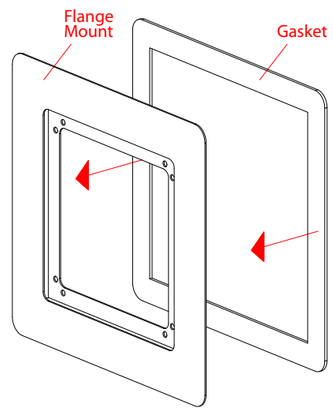

Adhere Provided Gasket on to the Back of Flange Mount
* or Weatherproofing Silicone Sealant (Not Provided)

STEP 6

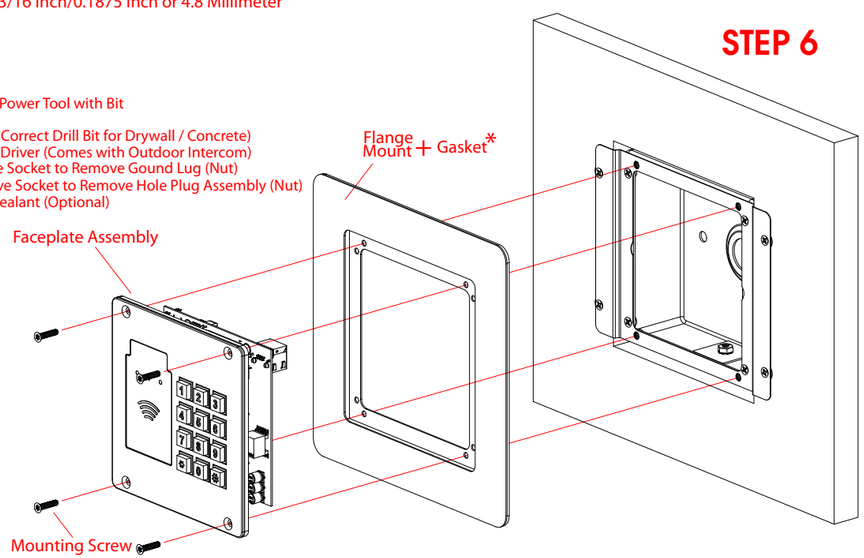

Tool Required:

1) Pencil / Marker
2) Phillip Drive Screw Driver / Power Tool with Bit
3) A Hammer / Rubber Mallet
4) 3/16" / 4.8mm Drill Bit (Use Correct Drill Bit for Drywall / Concrete)
5) T-15 Tamper-Resistant Torx Driver (Comes with Outdoor Intercom)
6) 5/16" / 8mm Wrench / Drive Socket to Remove Gound Lug (Nut)
7) 11/32" / 9mm Wrench / Drive Socket to Remove Hole Plug Assembly (Nut)
8) Weatherproofing Silicone Sealant (Optional)

© 2018, CyberData Corporation, ALL RIGHTS RESERVED

Quick Reference 931462B
© 2018, CyberData Corporation, ALL RIGHTS RESERVED